SIEMENS

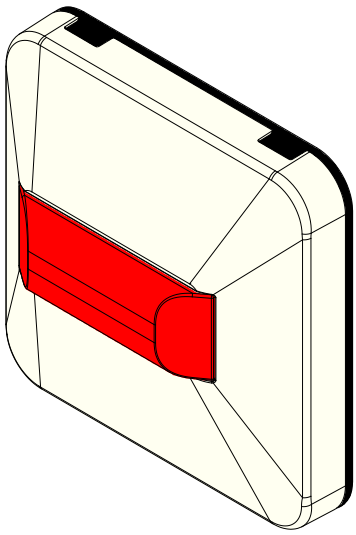

FDCAI221

Addressable alarm indicator

Technical Manual

A6V10258110_b_en_--
2016-03-17

Building Technologies

Control Products and Systems

Legal notice

Technical specifications and availability subject to change without notice.

Transmittal, reproduction, dissemination and/or editing of this document as well as utilization of its contents and communication thereof to others without express authorization are prohibited. Offenders will be held liable for payment of damages. All rights created by patent grant or registration of a utility model or design patent are reserved.

Issued by:
Siemens Switzerland Ltd.
Building Technologies Division
International Headquarters
Gubelstrasse 22
CH-6301 Zug
Tel. +41 41 724-2424
www.siemens.com/buildingtechnologies

Edition: 2016-03-17
Document ID: A6V10258110_b_en_--

© Siemens Switzerland Ltd, 2009

Table of contents

1 About this document 5
1.1 Applicable documents 7
1.2 Download center 7
1.3 Technical terms 8
1.4 Revision history 8
2 Safety 9
2.1 Safety instructions 9
2.2 Safety regulations for the method of operation 11
2.3 Standards and directives complied with 13
2.4 Release Notes 13
3 Structure and function 14
3.1 Overview 14
3.1.1 Details for ordering 14
3.1.2 Product version ES 15
3.2 Setup 16
3.2.1 Printed circuit board view 17
3.3 Function 18
3.3.1 Block diagram 18
3.3.2 Diagnosis levels 18
3.3.3 Line separator 18
3.4 Accessories 19
3.4.1 Additional frame AI330 19
3.4.2 Micro terminal DBZ1190-AA 19
3.4.3 Connection terminal DBZ1190-AB 19
4 Planning 20
4.1 Compatibility 20
4.2 Environmental influences 20
5 Mounting / Installation 21
5.1 Assembly 21
5.2 Additional frame AI330 23
5.3 Electrical connection 24
6 Commissioning 26
7 Maintenance / troubleshooting 27
7.1 Performance check 27
7.2 Localization mode 27
8 Specifications 28
8.1 Technical data 28
8.2 Dimensions 30
8.3 Environmental compatibility and disposal 31
Index 32

1 About this document

Goal and purpose

This document contains all necessary information on the FDCAI221 addressable alarm indicator. Following the instructions consistently will ensure that the product can be used safely and without any problems.

Intended use

The addressable alarm indicator FDCAI221 can only be used in a fire detection system FS20 or FS720.

Target groups

The information in this document is intended for the following target groups:

Target group	Activity	Qualification
Product Manager	• Is responsible for information passing between the manufacturer and regional company. • Coordinates the flow of information between the individual groups of people involved in a project.	• Has obtained suitable specialist training for the function and for the products. • Has attended the training courses for Product Managers.
Project Manager	• Coordinates the deployment of all persons and resources involved in the project according to schedule. • Provides the information required to run the project.	• Has obtained suitable specialist training for the function and for the products. • Has attended the training courses for Project Managers.
Project engineer	• Sets parameters for product depending on specific national and/or customer requirements. • Checks operability and approves the product for commissioning at the place of installation. • Is responsible for troubleshooting.	• Has obtained suitable specialist training for the function and for the products. • Has attended the training courses for Product Engineer.
Installation personnel	• Assembles and installs the product components at the place of installation. • Carries out a performance check following installation.	• Has received specialist training in the area of building installation technology or electrical installations.
Maintenance personnel	• Carries out all maintenance work. • Checks that the products are in perfect working order. • Searches for and corrects malfunctions.	• Has obtained suitable specialist training for the function and for the products.

Document identification

The document ID is structured as follows:

A6Vxxxxxxxx_aaAA_vv

A6Vxxxxxxxx_--AA_vv

A6Vxxxxxxxx_aa--_vv

A6Vxxxxxxxx_----_vv

ID code [1]	Description
A6Vxxxxxxxx	STEP-ID generated by the STEP system
_	Separator
aa	Language abbreviation in accordance with ISO 639-1
AA	Country abbreviation in accordance with ISO-3166-1
--	Multilingual or international
vv	Document version, single or double digit: a, b, …z; aa, ab, …az; ba, bb, …bz; etc.

[1] Some documents have different ID codes that are generated by an earlier system. There are also documents with up-to-date ID codes along with additional features in the designation.

ID code	Examples
ID_languageCOUNTRY_version -- = multilingual or international	A6V10215123_deDE_a A6V10215123_en--_a A6V10315123_----_a

Date format

The date format in the document corresponds to the recommendation of international standard ISO 8601 (format YYYY-MM-DD).

Conventions for text marking

Markups

Special markups are shown in this document as follows:

▷	Requirement for a behavior instruction
1. 2.	Behavior instruction with at least two operation sequences
–	Version, option, or detailed information for a behavior instruction
⇨	Intermediate result of a behavior instruction
⇨	End result of a behavior instruction
•	Numbered lists and behavior instructions with an operation sequence
[→ X]	Reference to a page number
'Text'	Quotation, reproduced identically
<Key>	Identification of keys
>	Relation sign and for identification between steps in a sequence, e.g., 'Menu bar' > 'Help' > 'Help topics'
↑ Text	Identification of a glossary entry

Supplementary information and tips

The 'i' symbol identifies supplementary information and tips for an easier way of working.

1.1 Applicable documents

Document ID	Title
008331	List of compatibility (for 'Sinteso™' product line)
A6V10229261	List of compatibility (for 'Cerberus™ PRO' product line)
A6V10244934	Data Sheet Addressable alarm indicator FDCAI221
A6V10258105	Installation Adressable alarm indicator FDCAI221, Additional frame AI330

Please also observe the documentation for your fire detection system.

1.2 Download center

You can download various types of documents, such as data sheets, installation instructions, and license texts via the following Internet address:

http://siemens.com/bt/download

- Enter the document ID in the 'Find by keyword' input box.

You will also find information about search variants and links to mobile applications (apps) for various systems on the home page.

1.3 Technical terms

Term	Explanation
ABS	Acrylonitrile-butadiene-styrene (plastic)
FDnet/C-NET	Addressed detector line
LED	Light-emitting diode

1.4 Revision history

The reference document's version applies to all languages into which the reference document is translated.

The first edition of a language version or a country variant may, for example, be version 'd' instead of 'a' if the reference document is already this version.

The table below shows this document's revision history:

Modification index	Edition date	Brief description
b	2016-03-17	• Data sheet updated in 'Applicable documents' chapter • Reference to data sheet added in 'Technical data' chapter • Changes in the 'Technical data' chapter • 'Download center' chapter updated • Full editorial revision of document • Change to date format in line with ISO 8601 specifications (yyyy-mm-dd format)
a	02.2010	First edition

The language versions and country variants produced by a local company have the same modification index as the corresponding reference document. They are not however included in the table below.

The table below shows the published language versions with the corresponding modification index:

Modification index	en_--	de_--	fr_--	it_--	es_--
b	X	X	X	X	X
a	X	X	X	X	X

X = published

– = no publication with this modification index

2 Safety

2.1 Safety instructions

The safety notices must be observed in order to protect people and property.

The safety notices in this document contain the following elements:

- Symbol for danger
- Signal word
- Nature and origin of the danger
- Consequences if the danger occurs
- Measures or prohibitions for danger avoidance

Symbol for danger

	This is the symbol for danger. It warns of **risks of injury**. Follow all measures identified by this symbol to avoid injury or death.

Additional danger symbols

These symbols indicate general dangers, the type of danger or possible consequences, measures and prohibitions, examples of which are shown in the following table:

 General danger

 Explosive atmosphere

 Voltage/electric shock

 Laser light

 Battery

 Heat

Signal word

The signal word classifies the danger as defined in the following table:

Signal word	Danger level
DANGER	DANGER identifies a dangerous situation, which **will result directly in death or serious injury** if you do not avoid this situation.
WARNING	WARNING identifies a dangerous situation, which **may result in death or serious injury** if you do not avoid this situation.
CAUTION	CAUTION identifies a dangerous situation, which could result in **slight to moderately serious injury** if you do not avoid this situation.
NOTICE	*NOTICE* identifies possible damage to property that may result from non-observance.

How risk of injury is presented

Information about the risk of injury is shown as follows:

	⚠ WARNING
	Nature and origin of the danger Consequences if the danger occurs • Measures / prohibitions for danger avoidance

How possible damage to property is presented

Information about possible damage to property is shown as follows:

!	*NOTICE*
	Nature and origin of the danger Consequences if the danger occurs • Measures / prohibitions for danger avoidance

2.2 Safety regulations for the method of operation

National standards, regulations and legislation

Siemens products are developed and produced in compliance with the relevant European and international safety standards. Should additional national or local safety standards or legislation concerning the planning, mounting, installation, operation or disposal of the product apply at the place of operation, then these must also be taken into account together with the safety regulations in the product documentation.

Electrical installations



⚠ WARNING

Electrical voltage

Electric shock

- Work on electrical installations may only be carried out by qualified electricians or by instructed persons working under the guidance and supervision of a qualified electrician, in accordance with the electrotechnical regulations.

- Wherever possible disconnect products from the power supply when carrying out commissioning, maintenance or repair work on them.
- Lock volt-free areas to prevent them being switched back on again by mistake.
- Label the connection terminals with external external voltage using a 'DANGER External voltage' sign.
- Route mains connections to products separately and fuse them with their own, clearly marked fuse.
- Fit an easily accessible disconnecting device in accordance with IEC 60950-1 outside the installation.
- Produce earthing as stated in local safety regulations.



⚠ CAUTION

Noncompliance with the following safety regulations

Risk of injury to persons and damage to property

- Compliance with the following regulations is required.



- Specialist electrical engineering knowledge is required for installation.
- Only an expert is permitted to carry out installation work.

Incorrect installation can take safety devices out of operation unbeknown to a layperson.

Mounting, installation, commissioning and maintenance

- If you require tools such as a ladder, these must be safe and must be intended for the work in hand.
- When starting the fire control panel ensure that unstable conditions cannot arise.
- Ensure that all points listed in the 'Testing the product operability' section below are observed.
- You may only set controls to normal function when the product operability has been completely tested and the system has been handed over to the customer.

Testing the product operability

- Prevent the remote transmission from triggering erroneously.
- If testing building installations or activating devices from third-party companies, you must collaborate with the people appointed.
- The activation of fire control installations for test purposes must not cause injury to anyone or damage to the building installations. The following instructions must be observed:
  - Use the correct potential for activation; this is generally the potential of the building installation.
  - Only check controls up to the interface (relay with blocking option).
  - Make sure that only the controls to be tested are activated.
- Inform people before testing the alarm devices and allow for possible panic responses.
- Inform people about any noise or mist which may be produced.
- Before testing the remote transmission, inform the corresponding alarm and fault signal receiving stations.

Modifications to the system design and the products

Modifications to the system and to individual products may lead to faults, malfunctioning and safety risks. Written confirmation must be obtained from Siemens and the corresponding safety bodies for modifications or additions.

Modules and spare parts

- Components and spare parts must comply with the technical specifications defined by Siemens. Only use products specified or recommended by Siemens.
- Only use fuses with the specified fuse characteristics.
- Wrong battery types and improper battery changing lead to a risk of explosion. Only use the same battery type or an equivalent battery type recommended by Siemens.
- Batteries must be disposed of in an environmentally friendly manner. Observe national guidelines and regulations.

Disregard of the safety regulations

Before they are delivered, Siemens products are tested to ensure they function correctly when used properly. Siemens disclaims all liability for damage or injuries caused by the incorrect application of the instructions or the disregard of danger warnings contained in the documentation. This applies in particular to the following damage:

- Personal injuries or damage to property caused by improper use and incorrect application
- Personal injuries or damage to property caused by disregarding safety instructions in the documentation or on the product
- Personal injury or damage to property caused by poor maintenance or lack of maintenance

2.3 Standards and directives complied with

A list of the standards and directives complied with is available from your Siemens contact.

2.4 Release Notes

Limitations to the configuration or use of devices in a fire detection installation with a particular firmware version are possible.



⚠ WARNING

Limited or non-existent fire detection

Personal injury and damage to property in the event of a fire.

- Read the 'Release Notes' before you plan and/or configure a fire detection installation.
- Read the 'Release Notes' before you carry out a firmware update to a fire detection installation.

!

NOTICE

Incorrect planning and/or configuration

Important standards and specifications are not satisfied.

Fire detection installation is not accepted for commissioning.

Additional expense resulting from necessary new planning and/or configuration.

- Read the 'Release Notes' before you plan and/or configure a fire detection installation.
- Read the 'Release Notes' before you carry out a firmware update to a fire detection installation.

3 Structure and function

3.1 Overview

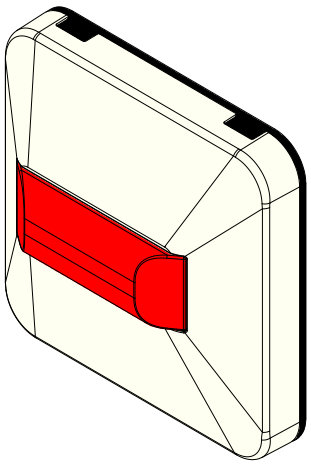

Figure 1: Addressable alarm indicator FDCAI221

Addressable alarm indicator FDCAI221

When a fire control panel is appropriately configured, the addressable alarm indicator FDCAI221 provides repeat signals for automatic fire detectors.

When activated the addressable alarm indicator FDCAI221 flashes once per second.

The addressable alarm indicator FDCAI221 must not be used as a substitute for a beacon, sounder base, alarm sounder or other alarm device!

Properties

The addressable alarm indicator has the following features:

- Communication and supply via detector line
- Built-in line separator
- Different mounting options

You will find more detailed information in the fire detection system documentation.

3.1.1 Details for ordering

Type	Order number	Designation
FDCAI221	S54370-F10-A1	Addressable alarm indicator

3.1.2 Product version ES

The product version ES provides the technical status of a device in terms of software and hardware. The product version is provided as a two-digit number.

You will find the details of your device's product version:

- On the packaging label
- On the product label or the type plate

Product version on the packaging label

Details of the product version can be found directly on the packaging label in the barcode:

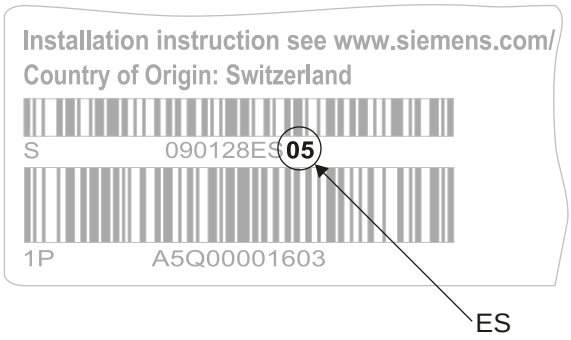

Figure 2: Example of a packaging label with details of the product version

Product version on the product label and the type plate

Details of the product version can be found after the device order number:



Figure 3: Example of a product label with details of the product version

Depending on the product and various approvals, the product labels may differ in terms of the information type and layout.

Look for your device's order number on the product label.

You will find the product version after the order number.

3.2 Setup

The addressable alarm indicator FDCAI221 consists of a base plate, printed circuit board, optical fiber, and cover cap.

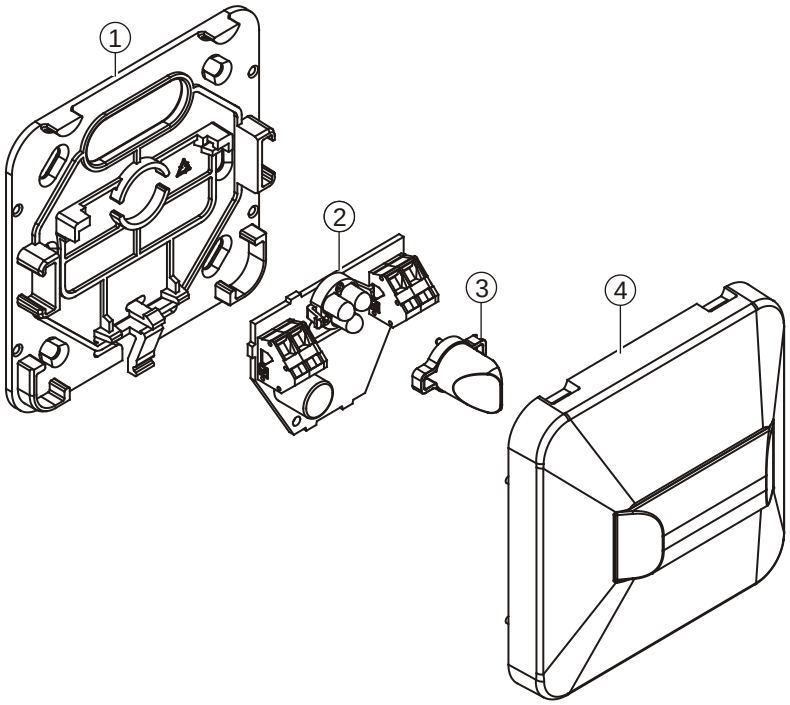

Figure 4: Components of the FDCAI221

1 Base plate
2 PCB
3 Optical fiber
4 Cover cap

The addressable alarm indicator FDCAI221 is designed for recess-mounted cable entry as standard.

For surface-mounted cable entry the additional frame AI330 (accessory) must also be mounted.

See also

Additional frame AI330 [→ 23]

3.2.1 Printed circuit board view

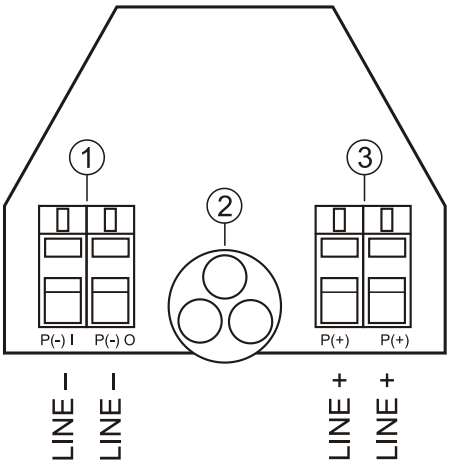

Figure 5: PCB view of addressable alarm indicator FDCAI221

1 Terminal block (LINE -)
2 LED
3 Terminal block (LINE +)

3.3 Function

3.3.1 Block diagram

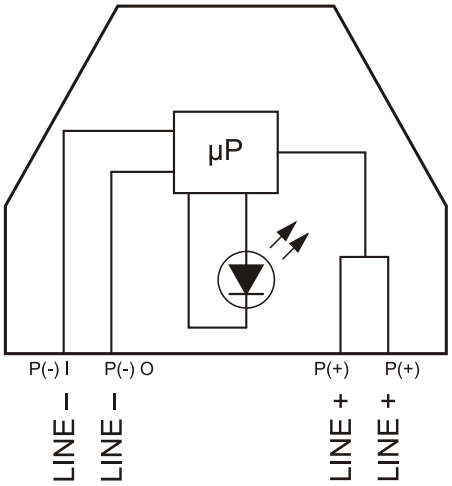

Figure 6: Block diagram of addressable alarm indicator FDCAI221

LINE	Detector line	µP	Microprocessor

3.3.2 Diagnosis levels

The addressable alarm indicator FDCAI221 largely monitors its functions by itself. The following diagnosis levels are taken from the different control measuring processes:

- Normal
- Fault

When a fatal error occurs, which impairs the function of the alarm indicator, a fault message is reported to the control panel.

You will find more detailed information in the fire detection system documentation.

3.3.3 Line separator

All FDnet/C-NET devices are equipped with a line separator.

The FDnet/C-NET device is equipped with electronic switches which isolate the defective part in case of a short-circuit on the FDnet/C-NET detector line. The rest of the detector line remains serviceable. On a loop line, all FDnet/C-NET devices remain fully functional after a single short-circuit.

3.4 Accessories

3.4.1 Additional frame AI330

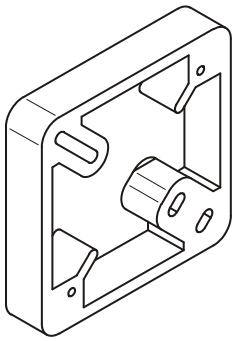

- For wall mounting of external alarm indicators
- For surface-mounted cable entry with cable diameters of max. 10 mm
- Compatible with:
  - External alarm indicators AI322, AI340
  - External alarm indicators DJ1192
  - External alarm indicators FDAI92
  - External alarm indicators AI92C
  - External alarm indicators FDAI92-Ex
  - Addressable alarm indicators FDCAI221
- Order number: BPZ:3169430001

See also

Additional frame AI330 [→ 23]

3.4.2 Micro terminal DBZ1190-AA

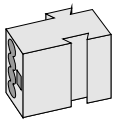

- Auxiliary terminal for connecting cables
- For T-branches of additional cabling e.g. for detector heating units, sounder base, external alarm indicators etc.
- For conductor cross-sections of 0.28…0.5 mm^2
- 4-pin
- Order number: BPZ:4677080001

3.4.3 Connection terminal DBZ1190-AB

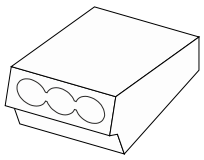

- Auxiliary terminal for connecting cables
- For T-branches of additional cabling, e.g., for cable shielding, detector heating units, sounder base, external alarm indicators, etc.
- For conductor cross-sections of 1…2.5 mm^2
- 3 poles
- Order number: BPZ:4942340001

4 Planning

When planning a project, proceed as follows:

1. Take into account the compatibility
2. Define the place of installation

4.1 Compatibility

Compatible with control panels that support the FDnet/C-NET detector line.

Detector line	Control panel			
	FC20xx	FC72x	SIGMASYS	AlgoRex
FDnet	X	-	–	–
C-NET	–	X	–	–

X = compatible

– = not compatible

You will find detailed information in the 'List of compatibility'.

See also

Applicable documents [→ 7]

4.2 Environmental influences

If the devices are used in industrial applications, consultation with the project manager is required, since plastics do not withstand certain environmental conditions.

The following factors must be taken into consideration:

- Chemicals
- Temperature
- Moisture

5 Mounting / Installation

5.1 Assembly

	**⚠ CAUTION**
	Electrical voltage on lines Risk of injury due to electric shock • During mounting and installation work, electrical voltage must not be applied to the lines.

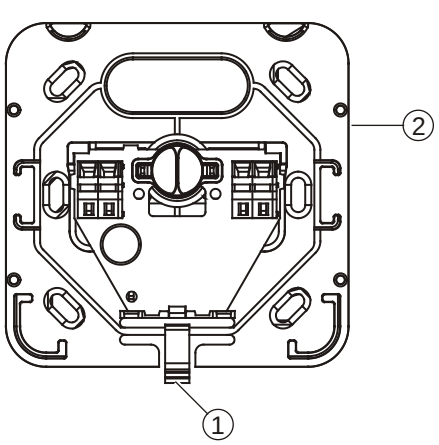

Figure 7: FDCAI221 with cover cap removed

1 Cam
2 Base plate
3 Cover cap

▷ The following description applies to recess-mounted cable entry. For surface-mounted cable entry the alarm indicator must also be mounted on an additional frame AI330 (accessory).

1. Press the black cam (1) on the base plate (2).
2. Remove the cover cap (3).
3. Mount the base plate (2) on a wall or recessed box with 2 … 4 screws. Screw diameter: max. 3 mm

4. Connect the alarm indicator to the detector line (see section 'Electrical connection').
5. Fit the cover cap (3) on the base plate (2).
6. Snap the cover cap (3) onto the base plate (2).

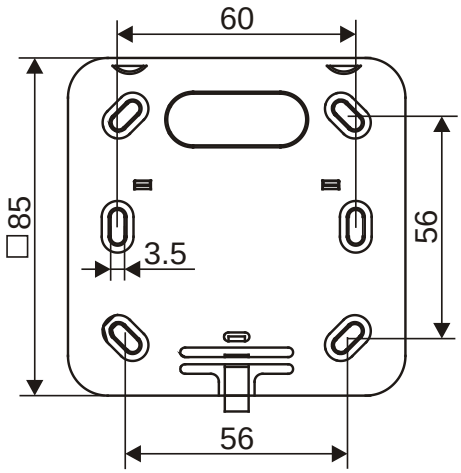

Figure 8: Dimensions of the base plate for the FDCAI221

See also

- Additional frame AI330 [→ 23]
- Electrical connection [→ 24]

5.2 Additional frame AI330

When installing external alarm indicators, for surface-mounted cable entry an additional frame AI330 must first be mounted on a wall or other flat surface.

Cables with a maximum diameter of 10 mm may be used.

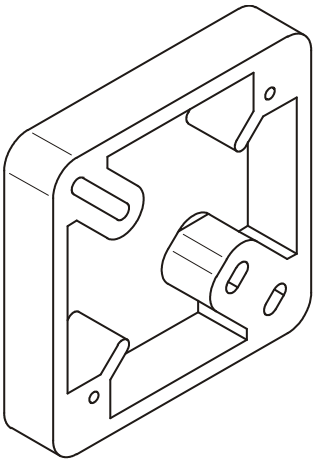

Figure 9: Additional frame AI330

1. Mount the additional frame on the wall with two screws.
   Diameter of the screws: max. 4 mm.
2. Attach the alarm indicator to additional frame AI330 with two wood or sheet-metal screws.
   Screw diameter: max. 3 mm.
   Screw length: max. 16 mm.

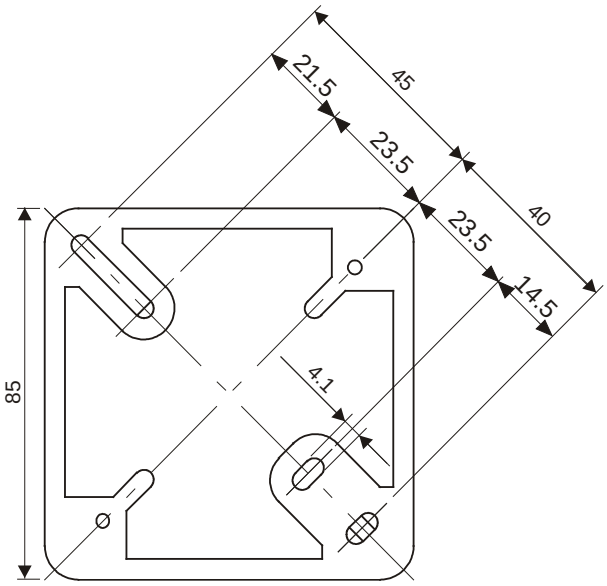

Figure 10: Dimensions of additional frame AI330

See also

Additional frame AI330 [→ 19]

5.3 Electrical connection

	• Specialist electrical engineering knowledge is required for installation. • Only an expert is permitted to carry out installation work. Incorrect installation can take safety devices out of operation unbeknown to a layperson.

Note the positive and negative poles.

Only connect one wire per terminal. This is the only way to ensure the connection is failure-free for the entire service life of the device.

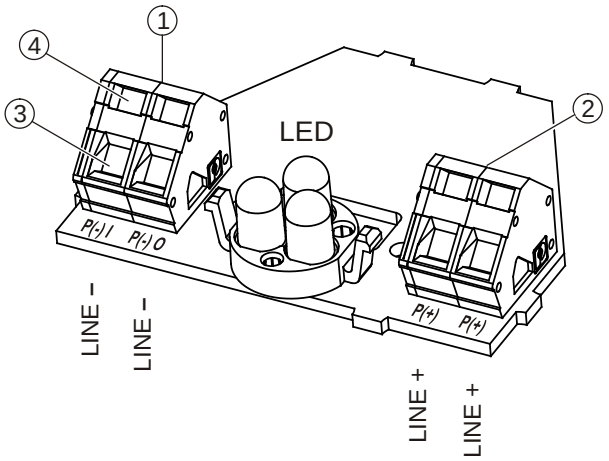

Figure 11: Terminal blocks of the FDCAI221

1 Terminal block (-)
2 Terminal block (+)
3 Socket strip
4 Relief for socket strip

▷ The following description assumes that the alarm indicator's base plate is already installed.

1. Strip approx. 7…8 mm of insulation from the connection wires.
2. Slide the wires into the socket strip (3) as shown in the connection diagram.
3. To release wires stuck in the spring clips, use a screwdriver or other suitable tool to press down the relief (4) of the socket strip.

If you are using shielded cable, the shielding must be connected with micro terminals DBZ1190-AA or connection terminals DBZ1190-AB (accessories).

Connection diagram

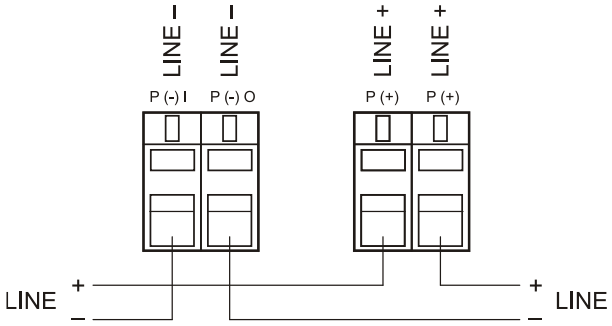

Figure 12: Connection diagram for the FDCAI221

6 Commissioning

The devices are commissioned via the control panel. The exact procedure is described in the control panel documentation.

Conduct a performance check once commissioning is complete.

7 Maintenance / troubleshooting

7.1 Performance check

The devices are automatically subjected to a performance check during the self-test. Nevertheless, it is necessary to check the devices on site at regular intervals.

Recommendation:

- Check the devices every year.
- Replace heavily soiled or damaged devices.
- Check cables connected to the terminals and correct connections.

No other special maintenance work is necessary.

7.2 Localization mode

For service purposes, the alarm indicators can be switched to localization mode. In this mode the alarm indicator flashes continuously once per second.

8 Specifications

8.1 Technical data

You will find information on approvals, CE marking, and the relevant EU directives for this device (these devices) in the following document(s); see 'Applicable documents' chapter:

- Document A6V10244934

Detector line	Operating voltage	DC 12…33 V
	Operating current:	
	• Standby	Typ. 250 µA
	Connection factor	1
	Address connection factor	1
	Separator connector factor	1
	Protocol	FDnet/C-NET
	System compatibility	See 'List of compatibility'
Line separator	Line voltage:	
	• Nominal	DC 32 V (= V_{nom})
	• Minimum	DC 12 V (= V_{min})
	• Maximum	DC 33 V (= V_{max})
	• Voltage at which the line separator opens:	
	• Minimum	DC 7.5 V (= $V_{SO\ min}$)
	• Maximum	DC 10.5 V (= $V_{SO\ max}$)
	Permanent current when switches are closed	Max. 1.5 A (= $I_{C\ max}$)
	Switching current (e.g., in the event of a short-circuit)	Max. 2 A (= $I_{S\ max}$)
	Leakage current when switches are open	Max. 1 mA (= $I_{L\ max}$)
	Serial impedance when switches are closed	Max. 0.4 Ω (= $Z_{C\ max}$)

The line separator is closed via an actuation signal from the control panel. Required line voltage: DC 12…33 V (normal range)

Connections	Detector line:	
	• Design	Socket strip

Ambient conditions	Operating temperature:	-10…+55 °C
	Storage temperature	-30…+70 °C
	Air humidity	≤95 % rel.
	Protection category (IEC 60529):	
	• Alarm indicator FDCAI221, wall mounting, recess-mounted cable entry	IP40
	• Alarm indicator FDCAI221 on additional frame AI330, wall mounting, surface-mounted cable entry	IP40
	Electromagnetic compatibility at	
	• 1 MHz…2 GHz	50 V/m
Mechanical data	Dimensions (W x H x D)	85 x 85 x 32 mm
	Weight	0.049 kg
	Material	ABS
	Colors:	
	Cover cap	~RAL 9010, pure white
	Base plate	~RAL 9021 tar black
Standards	European standards	• EN 54-17 • EN 54-18

8.2 Dimensions

FDCAI221	FDCAI221 with adapter frame AI330
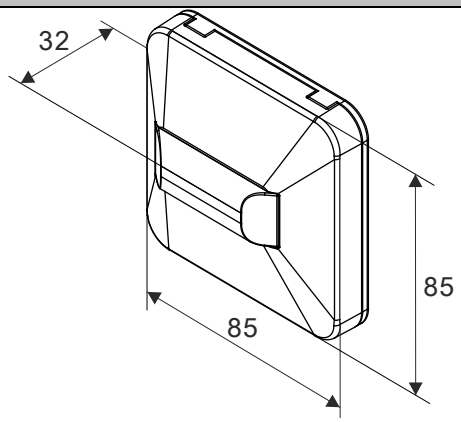	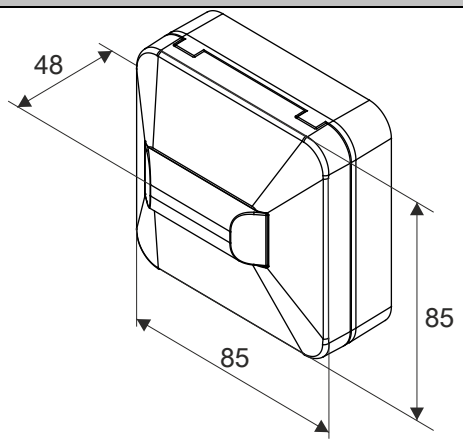

Drill pattern FDCAI221	Drill pattern AI330
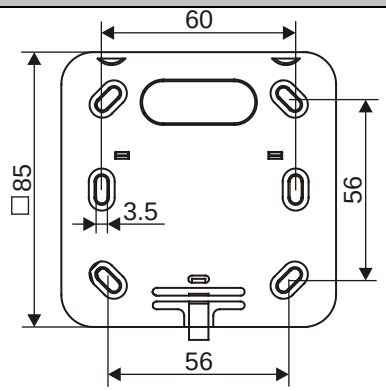	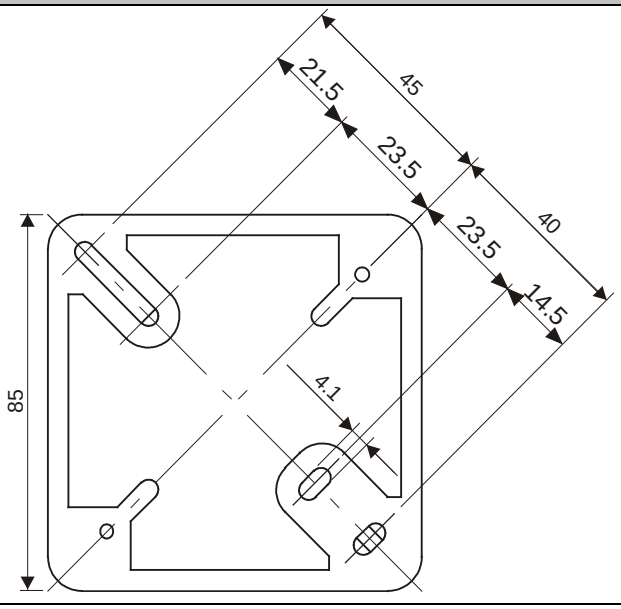

8.3 Environmental compatibility and disposal



This equipment is manufactured using materials and procedures which comply with current environmental protection standards as best as possible. More specifically, the following measures have been undertaken:

- Use of reusable materials
- Use of halogen-free plastics
- Electronic parts and synthetic materials can be separated

Larger plastic parts are labeled according to ISO 11469 and ISO 1043. The plastics can be separated and recycled on this basis.



Electronic parts and batteries must not be disposed of with domestic waste.

- Take electronic parts and batteries to local collection points or recycling centers.
- Contact local authorities for more information.
- Observe national requirements for disposing of electronic parts and batteries.

Index

A

Application area
- Ambient conditions 20

Approvals 28

C

CE marking 28

Compatibility 20

Compatibility with control panels 20

Control panel 26

D

Disposal 31

Documentation for fire detection system 7

Download center
- URL 7

E

Environmental compatibility 31

Environmental influences 20

ES
- Product version 15

EU directives 28

I

Impact
- Chemicals 20
- Moisture 20
- Temperature 20

Intended use 5

L

Line separator
- Function 18

List of compatibility 7, 20

M

Maintenance intervals 27

P

Packaging label
- Product version 15

Product label
- Product version 15

R

Recycling 31

S

Short-circuit
- Line separator 18

Standards 29

T

Type plate
- Product version 15

Issued by
Siemens Switzerland Ltd
Building Technologies Division
International Headquarters
Gubelstrasse 22
CH-6301 Zug
+41 41-724 24 24
www.siemens.com/buildingtechnologies

© Siemens Switzerland Ltd, 2009
Technical specifications and availability subject to change without notice.